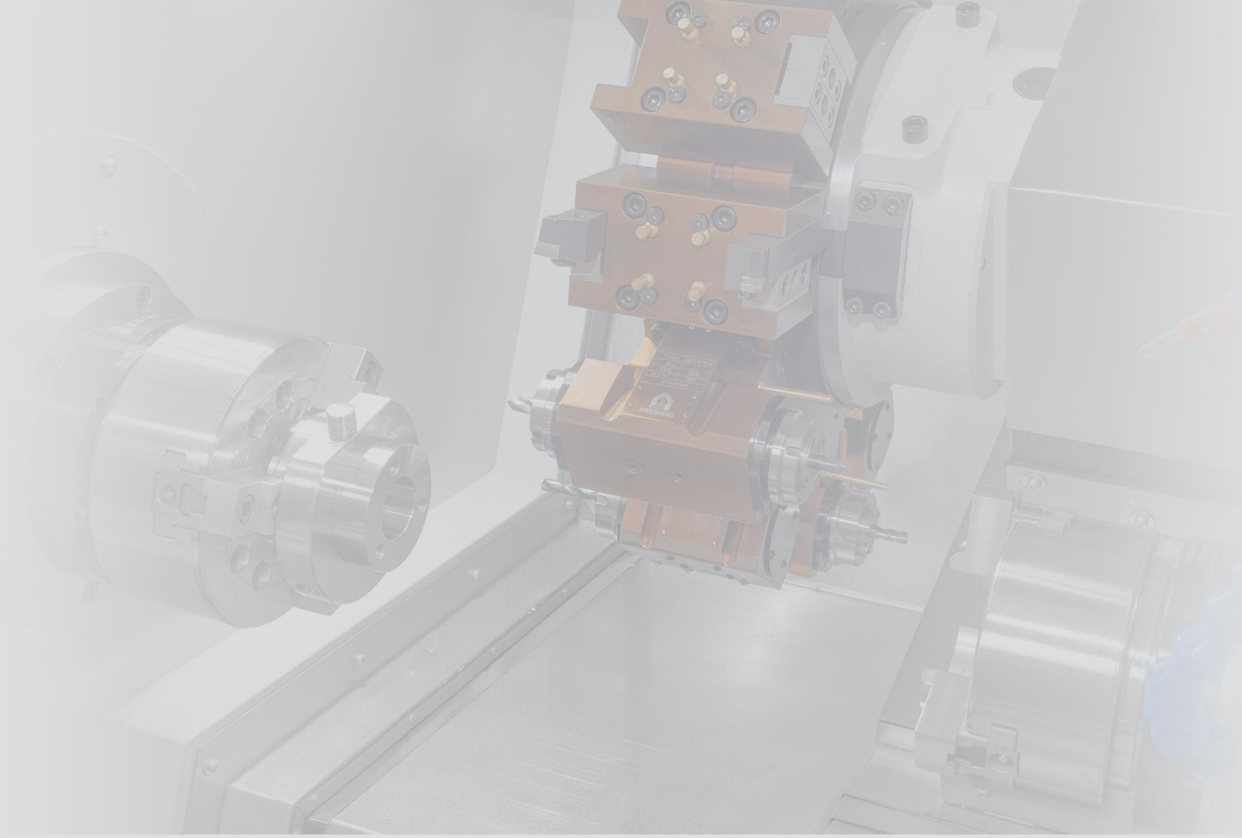

宝鸡机床集团有限公司
宝鸡忠诚精密数控设备有限责任公司
地　　址：中国陕西省宝鸡市高新区高新十一路
销售电话：0917-3907251　3907281
售后热线：0917-3907131
传　　真：0917-3907131
邮　　编：721013
网　　址：www.bjjmsk.com

Baoji Machine Tool Group Co.,Ltd.
Baoji Zhongcheng Precision CNC Equipment Co.,Ltd.
Add: Gaoxin 11 st Road,Baoji City,Shaanxi,China
Sales Tel: 0917-3907251　3907281
After Sale Tel: 0917-3907131
Fax: 0917-3907131
Postcode: 721013
Website: http://www.bjjmsk.com

样册内所印各种文字说明、图片及技术参数若有更新，恕不另行通知。
The kind of printing a variety of text,images and technical parameters are updated,without notice.

2025.02

BOSHI
宝鸡机床

专注数控机床智能制造

FOCUS ON INTELLIGENT
MANUFACTURING IN MACHINE TOOLS

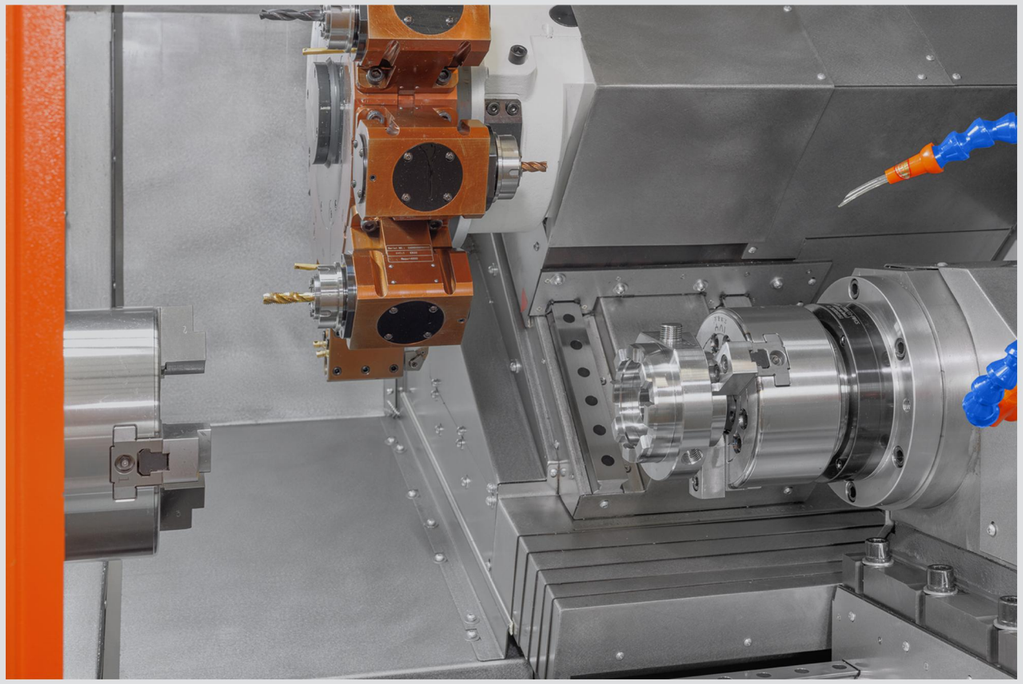

宝鸡机床集团有限公司
Baoji Machine Tool Group Co., Ltd.

宝鸡忠诚精密数控设备有限责任公司
Baoji Zhongcheng Precision CNC Equipment Co., Ltd.



宝鸡忠诚精密数控设备有限责任公司是宝鸡机床集团下属的高新技术企业，专注CNC数控车床、数控车铣复合中心及数控自动化单元的研发、制造、销售与技术服务。

公司依托宝鸡机床集团，结合自身的市场定位，依据雄厚的专业技术力量、先进的制造设备和检测仪器，相继研发制造数控高精密排刀车床、数控刀塔车床、数控车铣复合中心及数控自动化单元等系列适应市场需求的产品，广泛应用于航空航天、通讯、新能源汽车、电子接插件、医疗器械等机械制造领域。

公司是陕西省“专精特新”中小企业，建有“国家级技能大师工作室”，有一支高素质、高技能的工程技术人员和快速反应的职工队伍，本着“责任、担当、品质、专业”的理念，以技术创新为手段，追求卓越品质，完善的“售前、售中、售后”的快速响应的专业服务体系，为用户创造价值。

Baoji Zhongcheng Precision CNC Equipment Co., Ltd is a hi-tech enterprise invested and held by Baoji Machine Tool Group Co., Ltd., focus on the research and development, manufacturing, sales and technical service of CNC lathe, turning-milling compound center and CNC automatic unit.

The company relying on Baoji Machine Tool Group, combined with its own market positioning, based on strong professional and technical force, advanced manufacturing equipment and testing instruments, the company has successively developed and manufactured high precision comb type CNC lathe, turret CNC lathe, CNC turning-milling complex center ,CNC automation unit and other series of lathes could be processed to meet the market demand of products, they are widely used in industries of aerospace, new energy vehicles, electronic connectors, medical equipment and other mechanical manufacturing fields.

The company is recognized as "Specialized, Refined, Unique, and Innovative" (SREI) SME in Shaanxi Province and has established with a "National Skill Master Studio", It boasts a team of highly qualified and skilled engineering and technical personnel, along with a responsive workforce. Guided by the philosophy of "Responsibility, Commitment, Quality, and Professionalism", the company leverages technological innovation to pursue quality. With a comprehensive and professional service system that ensures rapid response across" pre-sales, mid-sales and after-sales" stages, it is dedicated to creating value for its users.

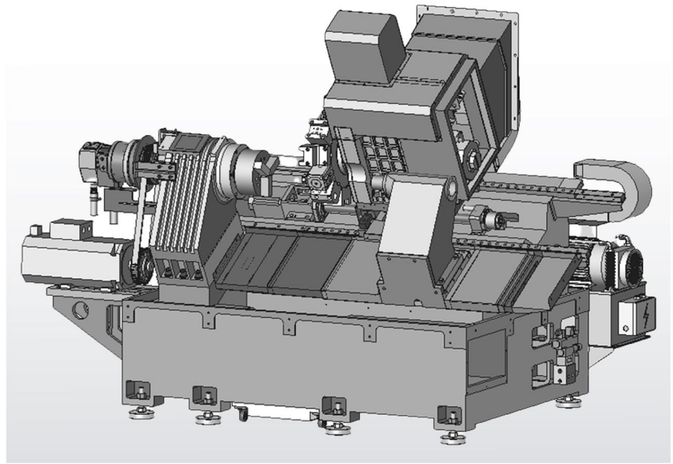





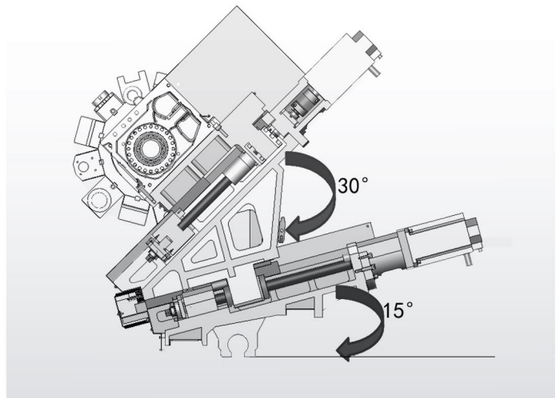

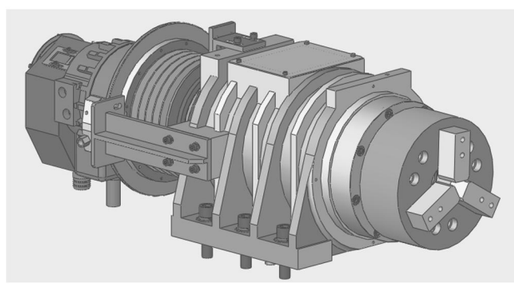

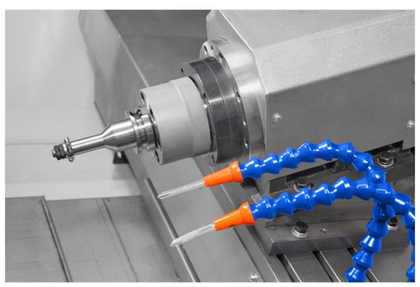

插补Y轴车铣复合中心

Interpolated Y-axis Turning-milling Centers

CH5255Y

- 整体式大跨距阶梯式床身结构，具有高刚性及稳定性。
- 15°阶梯式X1轴床鞍及30°X轴床鞍，形成插补Y轴，搭载BMT型伺服动力刀塔，铣削强劲有力。
- 主轴轴承采用高精度进口轴承，具有高稳定性及长寿命，加工精度高。
- 进给轴采用大规格、重载精密滚柱线轨，刚性强、阻尼低、精度高。
- 进给轴传动采用C3级精密滚珠丝杠，配合科学的预拉伸装配工艺，热变形小、传动精度高。
- 高精度C轴，液压碟刹，保证了铣削与钻削的加工精度。
- 机床标配液压程控尾座，可选配伺服程控尾座。
- 机床设置有侧、后两种排屑方式，便于用户合理选择排屑方式。

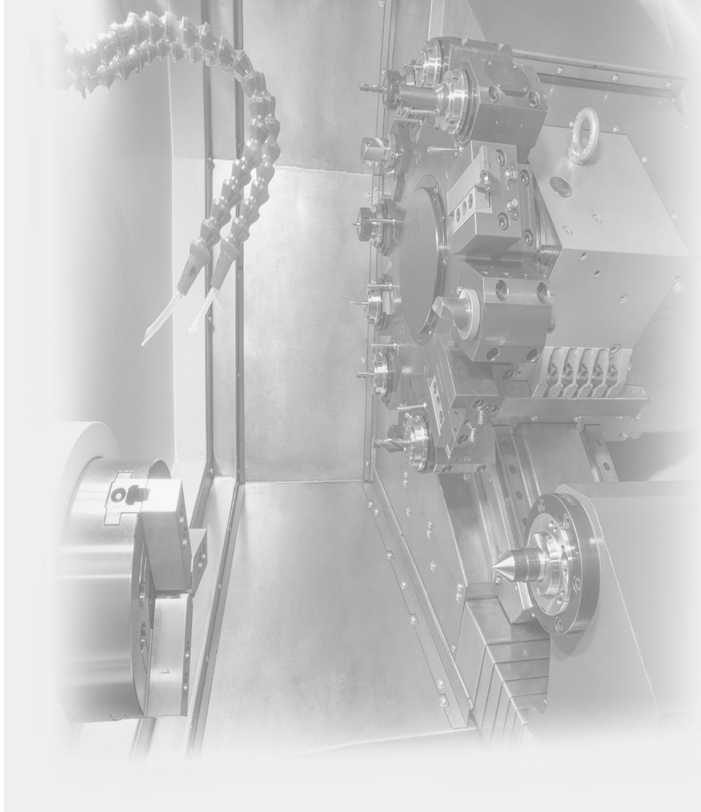



- Integrated stepped bed structure with a large span, which has high rigidity and good stability.
- 15° stepped X1- axis saddle and 30°-X axis saddle form an interpolated Y-axis, equipped with BMT type servo power turret, milling is strong and powerful.
- The spindle bearing adopts high-precision imported bearing, which has high stability, long life and high machining accuracy.
- The feed shaft adopts large size and heavy duty precision roller rail, which has strong rigidity, low damping and high precision.
- The feed shaft is driven by C3 precision ball screw, with scientific per-stretching assembly process, small thermal deformation and high transmission accuracy.
- High precision C-axis and hydraulic disc brake ensure the machining accuracy of milling and drilling.
- The machine is standard equipped with hydraulic control tailstock, also could choice servo program control tailstock.
- The machine is provided with two kinds of chip removal methods, side and back chip removal, which is convenient for users to choose.

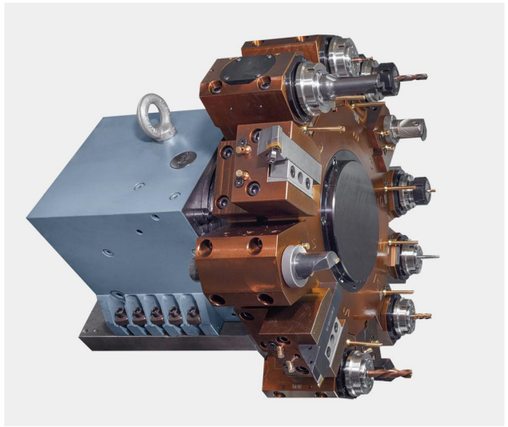



项目Item			单位Unit	CH5255Y	CH7265Y
加工范围 Capacity	床身上最大回转直径	Max.swing dia.over bed	mm	Φ750	Φ750
	滑板上最大回转直径	Max.swing dia.over slide	mm	Φ370	Φ370
	最大车削直径	Max.turning dia.	mm	Φ300	Φ260
	最大加工长度	Max.machining length	mm	550	489
	最大通过棒料直径	Max.bar dia.to be held	mm	Φ52	Φ72
	最大铣削直径(90°动力头)	Max. milling dia. (90°power head)	mm	Φ360	Φ336
主轴 Spindle	最高转速	Max.speed	rpm	3500	2500
	卡盘规格	Chuck specification	inch	8" 中空 hollow	10" 中空 hollow
	主轴头型式	Type of spindle head		A2-6	A2-8
	主轴内孔锥度	Taper of spindle bore		1:20/Φ68	1:20/Φ96
	主轴通孔直径	Spindle thru-hole	mm	Φ62	Φ87
	电机功率	Power motor	kW	11/15	15/22.5
进给 Feed	X/Z/Y轴行程	Travel X/Z/Y	mm	278/600/±55	278/600/±55
	X/Z/Y轴快移速度	Rapid traverse X/Z/Y	m/min	20/20/12	20/20/12
刀架 Turret	Y轴型式	Type of Y-axis		插补Y轴 interpolated Y-axis	插补Y轴 interpolated Y-axis
	刀架型式	Type of turret		动力刀塔 power turret	动力刀塔 power turret
	刀位数量	Capacity of turret	pcs	12	12
	刀杆尺寸(车削/镗削)	Tool rod dimension (turning/boring)	mm	25x25/Φ40	25X25/Φ40
	刀座型式	Type of revolving tool		BMT55-ER32	BMT65-ER40
	最大安装刀柄直径	Max.dia.of tool holder to mount	mm	Φ20	Φ26
	最大钻孔/攻丝直径	Max.drilling/tapping dia.	mm	Φ16/M16 (45钢 steel)	Φ16/M16 (45钢 steel)
	刀塔动力头最高转速	Max. rotating speed of turret power head	rpm	4000	4000
	刀塔动力头电机扭矩	Torque motor of turret power head	Nm	18.6	18.6
尾座 Tailstock	尾座行程	Travel of tailstock	mm	420	420
	顶尖锥度	Taper of center sleeve		MT No.5	MT No.5
	尾座形式	Type of tailstock		液压程控 hydraulic programmable control	
其它 Others	CNC控制系统	CNC controller		SYNTEC 22TB-E	SYNTEC 22TB-E
	电源容量	Power capacity	KVA	30	32
	床鞍倾斜角度	Slant degree of saddle	deg	15°+30°	15°+30°
	冷却箱容积	Volume of coolant pump	L	123	123
	冷却电机功率	Motor power of coolant	W	370	370
	机床重量	Weight of machine	kg	4960	5010
	机床外形尺寸(长x宽x高)	Dimension of machine (LxWxH)	mm	2946x2014x2144	3006x2014x2144

双主轴插补Y轴车铣复合中心

Dual- spindle Interpolated Y-axis Turning-milling Centers

CH5255SY

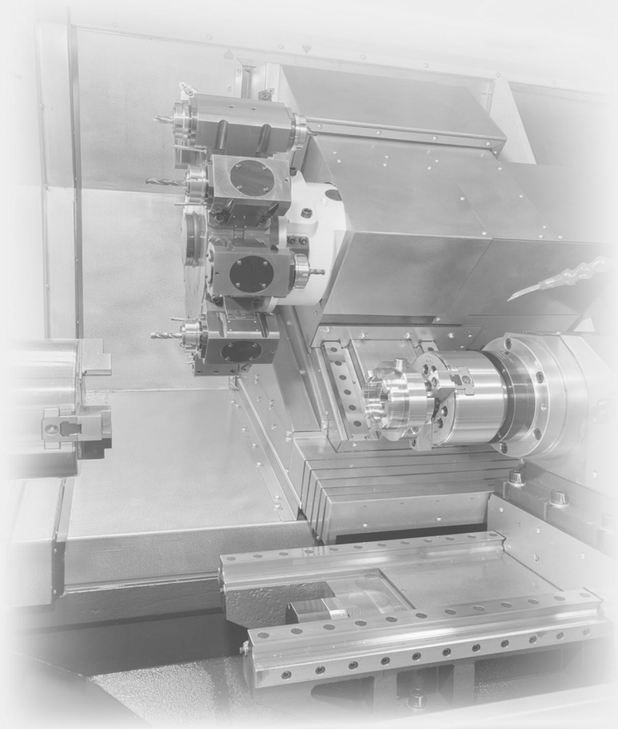



- 整体式大跨距阶梯式床身结构，具有高刚性及稳定性。
- 15°阶梯式X1轴床鞍及30°X轴床鞍，形成插补Y轴，搭载BMT型伺服动力刀塔，铣削强劲有力。
- 主轴及副主轴均采用大扭矩永磁同步电主轴，保证高稳定性与高刚性。
- 伺服驱动副主轴的和主轴同步对接，性能优良，便于零件的正反面加工。
- 进给轴采用大规格、重载精密滚柱线轨，刚性强、阻尼低、精度高。
- 主轴及副主轴均具备高精度C轴功能，液压碟刹，保证了复合加工精度。
- 进给轴传动采用C3级精密滚珠丝杠，配合科学的预拉伸装配工艺，热变形小、传动精度高。
- 机床设置有侧、后两种排屑方式，便于用户合理选择排屑方式。

- Integrated stepped bed structure with a large span, which has high rigidity and good stability.
- 15° stepped X1- axis saddle and 30°-X axis saddle form an interpolated Y-axis, equipped with BMT type servo power turret, milling is strong and powerful.
- The spindle and auxiliary spindle are equipped with large torque permanent magnet synchronous motor spindles, ensures high stability and rigidity.
- Servo drive auxiliary spindle and spindle synchronous docking, excellent performance, it is easy to process the front and back parts.
- The feed shaft adopts large size and heavy duty precision roller rail, which has strong rigidity, low damping and high precision.
- Spindle and auxiliary spindle all has high-precision C-axis function, hydraulic disc brake, ensures the precision of composite processing
- The feed shaft is driven by C3 precision ball screw, with scientific per-stretching assembly process, small thermal deformation and high transmission accuracy.
- The machine is provided with two kinds of chip removal methods, side and back chip removal, which is convenient for users to choose.

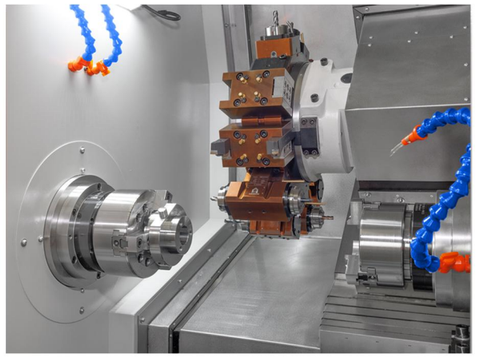

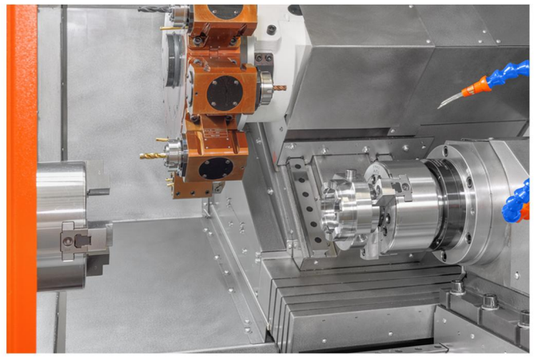

项目 Item			单位Unit	CH5255SY	DST240-SY
加工范围 Capacity	床身上最大回转直径	Max.swing dia.over bed	mm	Φ600	Φ600
	主轴/副主轴最大车削直径	Max.turning dia. of spindle/sub-spindle	mm	Φ300/Φ300	Φ240/Φ220
	最大加工长度	Max.machining length	mm	420	550
	主轴端到副主轴端最大距离	Max. distance from spindle to subspindle end	mm	660	600
主轴 Spindle	主轴数量	Spindle quantity	pcs	2	2
	主轴/副主轴最高转速	Max.speed of spindle/sub-spindle	rpm	4000/4500	4000/4500
	主轴/副主轴卡盘直径	Chuck Dia. of spindle/sub-spindle	inch	8″/6″中空 hollow	8″/6″中空 hollow
	主轴/副主轴轴端型式	Type of spindle/sub-spindle shaft end		A2-6/A2-5	A2-6/A2-5
	主轴/副主轴内孔锥度	Taper of spindle/sub-spindle bore		1:20/MT No.6	1:20/MT No.6
	主轴/副主轴通孔直径	Dia. thru-hole of spindle/sub-spindle	mm	Φ66/Φ56	Φ66/Φ56
	主轴/副主轴最大通过棒料直径	Max.bar dia.to be held of spindle/sub-spindle	mm	Φ52/Φ45	Φ52/Φ45
	主轴电机功率	Motor power of spindle	kW	15/26.8 (电主轴 motorized spindle)	
	副主轴电机功率	Motor power of sub-spindle	kW	11/23.1 (电主轴 motorized spindle)	
进给 Feed	X 轴行程	Travel X	mm	278/260 (X/X1)	220/200 (X1/X2)
	Z轴行程	Travel Z	mm	600	600/600 (Z1/Z2)
	Y轴行程	Travel Y	mm	±55	±50 (上刀架 above turret)
	副主轴行程	Sub-spindle of travel	mm	420	600
	X 轴快移速度	Rapid traverse X	m/min	20/20 (X/X1)	20/20 (X1/X2)
	Z轴快移速度	Rapid traverse Z	m/min	20	20/20 (Z1/Z2)
	Y轴快移速度	Rapid traverse Y	m/min	18	18 (上刀架 above turret)
	副主轴快移速度	Rapid traverse of sub-spindle	m/min	20	20
动力刀塔 Power turret	Y轴型式	Type of Y-axis		插补Y轴 interpolated Y-axis	正交Y轴 orthogonal Y-axis
	Y轴数量	Y-axis quantity	pcs	1	1 (上刀架 above turret)
	动力刀塔数量	Quantity of power turre	pcs	1	2
	刀位数量	Capacity of turret	pcs	12	12x2
	刀杆尺寸(车削/镗削)	Tool rod dimension (turning/boring)	mm	25x 25/Φ40	25x 25/Φ40
	刀座型式	Type of revolving tool		BMT55-ER32	BMT55-ER32
	刀塔动力头最高转速	Max. rotating speed of turret power head	rpm	4000	4000
	刀塔动力头电机扭矩	Torque motor of turret power head	Nm	15	15/15 (上/下刀架 above/below turret)
其它 Others	CNC控制系统	CNC controller		SYNTEC 22TB-E	SYNTEC 22TB-E
	电源容量	Power capacity	kVA	38	45
	床鞍倾斜角度	Slant degree of saddle	deg	15°+30°	45°
	冷却箱容积	Volume of coolant pump	L	123	150
	机床重量	Weight of machine	kg	5010	6600
	机床外形尺寸(长x宽x高)	Dimension of machine (LxWxH)	mm	2946x2014x2144	3200x2300x2300

正交Y轴车铣复合中心

Orthogonal Y-axis Turning-milling Centers

CH6550DY

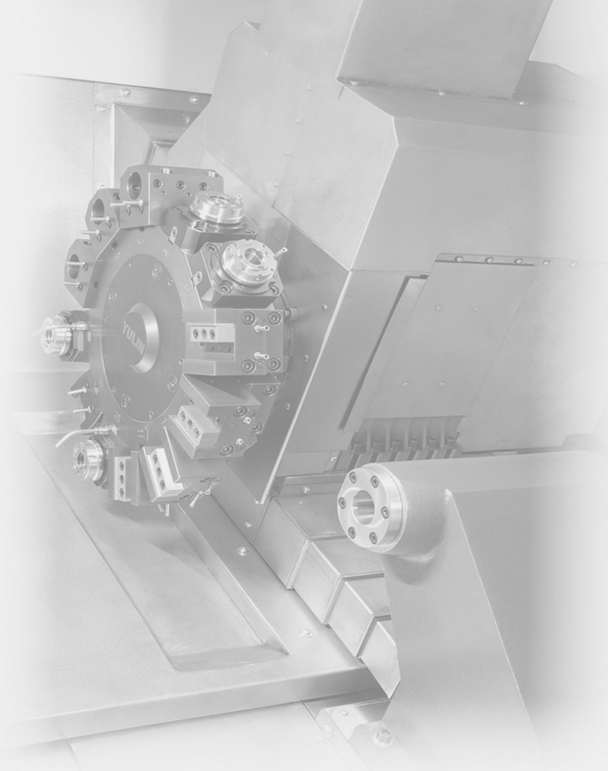



- 30°整体式斜床身底座结构，具有高刚性及稳定性。
- 机床配置正交Y轴12工位伺服动力刀塔，搭配BMT型动力刀座，铣削强劲有力。
- 主轴轴承采用高精度进口轴承，具有高稳定性及长寿命，加工精度高。
- 进给轴采用大规格、重载精密滚珠线轨，刚性强、阻尼低、精度高。
- 进给轴传动采用C3级精密滚柱丝杠，配合科学的预拉伸装配工艺，热变形小、传动精度高。
- 高精度C轴，液压碟刹，保证了铣削与钻削的加工精度。
- 机床标配液压程控尾座，可选配硬轨液压套筒尾座。
- 机床设置有侧、后两种排屑方式，便于用户合理选择排屑方式。

- Integrated base and 30° slant bed,which has high rigidity and stability.
- The machine is equipped with orthogonal Y-axis 12 station servo power turret combined with BMT type power turret, delivering powerful milling performance.
- The spindle bearing adopts with high-precision imported bearing, which has high stability, long life and high precision.
- The feed shaft adopts large size and heavy duty precision roller rail, which has strong rigidity, low damping and high precision.
- The feed shaft is driven by C3 precision ball screw, with scientific per-stretching assembly process, small thermal deformation and high transmission accuracy.
- High precision C-axis and hydraulic disc brake ensure the machining accuracy of milling and drilling.
- The machine is standard equipped with hydraulic control tailstock, while a hard-rail hydraulic sleeve tailstock is available as an optional configuration.
- The machine is provided with two kinds of chip removal methods, side and back chip removal, which is convenient for users to choose.







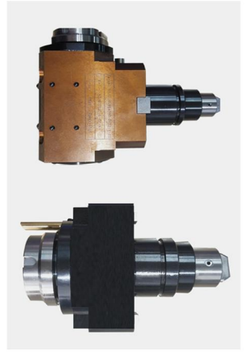

项目Item			单位Unit	CH6540DY	CH6550DY	CH6550	CH6560A	CH6560A/750
加工范围 Capacity	床身上最大回转直径	Max.swing dia.over bed	mm	Φ600	Φ500	Φ500	Φ600	Φ600
	滑板上最大回转直径	Max.swing dia.over slide	mm	Φ260	Φ380	Φ380	Φ320	Φ320
	最大车削直径	Max.turning dia.	mm	Φ260	Φ316	Φ316	Φ300	Φ300
	最大加工长度	Max.machining length	mm	350	500	500	500	750
	最大通过棒料直径	Max.bar dia.to be held	mm	Φ45	Φ52	Φ52	Φ52	Φ52
	最大铣削直径	Max. milling dia.	mm	Φ260	Φ426	Φ426	Φ330	Φ330
主轴 Spindle	最高转速	Max.speed	rpm	4000	3500	3500	3500	3500
	卡盘规格	Chuck specification	inch	6" 中空 hollow	8" 中空 hollow	8" 中空 hollow	8" 中空 hollow	8" 中空 hollow
	主轴头型式	Type of spindle head		A2-5	A2-6	A2-6	A2-6	A2-6
	主轴内孔锥度	Taper of spindle bore		MT No.6	1:20/Φ68	1:20/Φ68	1:20/Φ68	1:20/Φ68
	主轴通孔直径	Spindle thru-hole	mm	Φ57	Φ62	Φ62	Φ62	Φ62
	电机功率	Power motor	kW	7.5/11	11/15	11/15	15/18.5	15/18.5
进给 Feed	X/Z/Y轴行程	Travel X/Z/Y	mm	200/400/±35	250/530/±45	250/530	230/605	230/605
	X/Z/Y轴快移速度	Rapid traverse X/Z/Y	m/min	18/20/12	18/20/12	18/20	18/16	18/16
刀架 Turret	Y轴型式	Type of Y-axis		正交Y轴 orthogonal Y-axis		-	-	-
	刀架型式	Type of turret		动力刀塔 power turrent		动力刀塔 power turrent		
	刀位数量	Capacity of turret	pcs	15	12	12	12	12
	刀杆尺寸(车削/镗削)	Tool rod dimension (turning/boring)	mm	20x20/Φ25	25x25/Φ40	25x25/Φ40	25x25/Φ40	25x25/Φ40
	刀座型式	Type of revolving tool		BMT40-ER20	BMT55-ER32	BMT55-ER32	BMT55-ER20	BMT55-ER20
	最大安装刀柄直径	Max.dia.of tool holder to mount	mm	Φ13	Φ20	Φ20	Φ13	Φ13
	最大钻孔/攻丝直径	Max.drilling/tapping dia.	mm	Φ8/M8 (45钢)	Φ12/M12 (45钢 steel)		Φ10/M10 (45钢 steel)	
	刀塔动力头最高转速	Max. rotating speed of turret power head	rpm	4000	4000	4000	4000	4000
	刀塔动力头电机扭矩	Torque motor of turret power head	Nm	11.5	15	15	15	15
尾座 Tailstock	尾座行程	Travel of tailstock	mm	320	450	450	140	140
	顶尖锥度	Taper of center sleeve		MT No.4	MT No.5	MT No.5	MT No.5	MT No.5
	尾座形式	Type of tailstock		液压程控 hydraulic programmable control			液压程控 hydraulic sleeve	
其它 Others	CNC控制系统	CNC controller		SYNTEC 22TB-E			SYNTEC 22TB-E	
	电源容量	Power capacity	KVA	22	28	23	30	30
	床身倾斜角度	Slant degree of bed	deg	30°	30°	30°	45°	45°
	冷却箱容积	Volume of coolant pump	L	93	123	123	80	80
	冷却电机功率	Motor power of coolant	W	370	370	370	370	370
	机床重量	Weight of machine	kg	4200	4470	4270	3620	3620
	机床外形尺寸(长x宽x高)	Dimension of machine (LxWxH)	mm	2850x2030x1890	2730x2116x2070	2800x2130x1780	2600x1770x1730	3220x1770x1730

正交Y轴车铣复合中心

Orthogonal Y-axis Turning-milling Centers

CH46DY

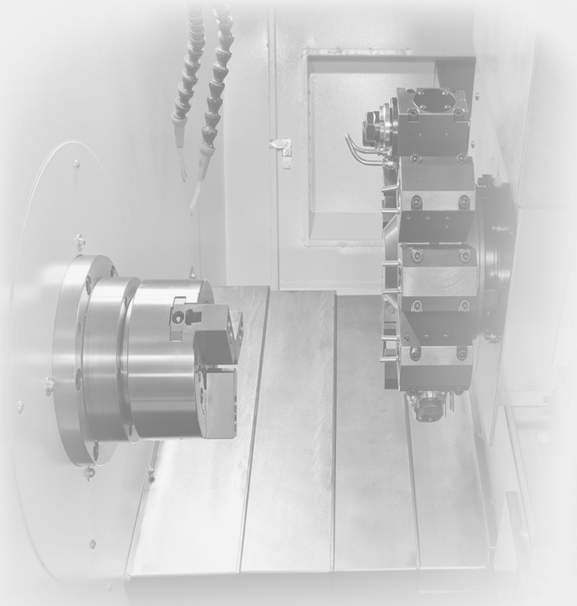



- 30°整体式斜床身底座结构，具有高刚性及稳定性。
- 机床配置正交Y轴15工位伺服动力刀塔，搭配BMT型动力刀座，铣削强劲有力。
- 主轴轴承采用高精度进口轴承，具有高稳定性及长寿命，加工精度高。
- 进给轴采用大规格、重载精密滚珠线轨， 刚性强、阻尼低、精度高。
- 进给轴传动采用C3级精密滚珠丝杠，配合科学的预拉伸装配工艺，热变形小、传动精度高。
- 高精度C轴，液压碟刹，保证了铣削与钻削的加工精度。
- 机床设置有侧、后两种排屑方式，便于用户合理选择排屑方式。

- Integrated base and 30° slant bed, which has high rigidity and stability.
- The machine is equipped with orthogonal Y-axis 15 station servo power turret combined with BMT type power turret, delivering powerful milling performance.
- The spindle bearing adopts with high-precision imported bearing, which has high stability, long life and high precision.
- The feed shaft adopts large size and heavy duty precision roller rail, which has strong rigidity, low damping and high precision.
- The feed shaft is driven by C3 precision ball screw, with scientific per-stretching assembly process, small thermal deformation and high transmission accuracy.
- High precision C-axis and hydraulic disc brake ensures the machining accuracy of milling and drilling
- The machine is provided with two kinds of chip removal methods, side and back chip removal, which is convenient for users to choose.

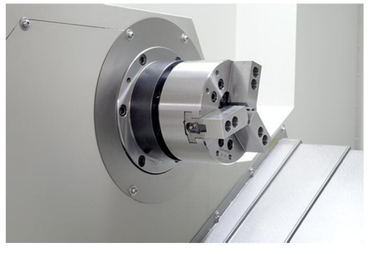

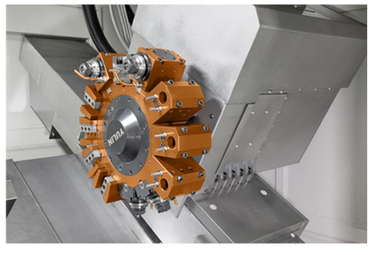

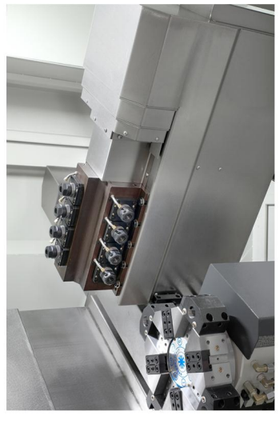

项目 Item			单位Unit	CH46DY	CH52DY	CK46F	CK52F
加工范围 Capacity	床身上最大回转直径	Max.swing dia.over bed	mm	Φ600	Φ600	Φ600	Φ600
	滑板上最大回转直径	Max.swing dia.over slide	mm	Φ240	Φ240	Φ150	Φ150
	最大车削直径	Max.turning dia.	mm	Φ350	Φ350	Φ150	Φ150
	最大加工长度	Max.machining length	mm	300	300	150	150
	最大通过棒料直径	Max.bar dia.to be held	mm	Φ45	Φ52	Φ45	Φ52
	最大铣削直径(90°动力头)	Max. milling dia. (90°power head)	mm	Φ360	Φ360	Φ150	Φ150
主轴 Spindle	最高转速	Max.speed	rpm	4000	3500	4000	3500
	卡盘/筒夹型式	Type of chuck/collet chuck		6"中空 hollow	8"中空 hollow	45型 type	52型 type
	主轴头型式	Type of spindle head		A2-5	A2-6	A2-5	A2-6
	主轴内孔锥度	Taper of spindle bore		MT No.6	1:20/Φ68	MT No.6	1:20/Φ68
	主轴通孔直径	Spindle thru-hole	mm	Φ57	Φ62	Φ57	Φ62
	电机功率	Power motor	kW	7.5/11	11/15	7.5/11	11/15
进给 Feed	X/Z/Y轴行程	Travel X/Z/Y	mm	240/370/60	240/370/60	380/350/220	380/350/220
	X/Z/Y轴快移速度	Rapid traverse X/Z/Y	m/min	18/20/12	18/20/12	18/20/12	18/20/12
刀架 Turret	Y轴型式	Type of Y-axis		正交Y轴 orthogonal Y-axis		正交Y轴 orthogonal Y-axis	
	刀架型式	Type of turret		动力刀塔 power turrent		液压刀塔+动力头 hydraulic turret+power head	
	刀位数量	Capacity of turret	pcs	15	15	8+(4+4)	8+(4+4)
	刀杆尺寸(车削/镗削)	Tool rod dimension (turning/boring)	mm	20×20/Φ25	20×20/Φ25	20×20/Φ25	20×20/Φ25
	刀座型式	Type of revolving tool		BMT40-ER20	BMT40-ER20	ER20	ER20
	最大安装刀柄直径	Max.dia.of tool holder to mount	mm	Φ13	Φ13	Φ13	Φ13
	最大钻孔/攻丝直径	Max.drilling/tapping dia.	mm	Φ8/M8 (45钢 steel)		Φ8/M8 (45钢 steel)	
	动力头最高转	Max. rotating speed of turret power head	rpm	4000	4000	3000	3000
	动力头电机额定扭矩	Rated torque motor of turret power head	Nm	11.5	11.5	7.5	7.5
其它 Others	CNC控制系统	CNC controller		SYNTEC 22TB-E	SYNTEC 22TB-E	GSK 988TA	GSK 988TA
	电源容量	Power capacity	KVA	22	30	20	28
	床身倾斜角度	Slant degree of bed	deg	30°	30°	30°	30°
	冷却箱容积	Volume of coolant pump	L	80	80	80	80
	冷却电机功率	Motor power of coolant	W	370	370	370	370
	机床重量	Weight of machine	kg	3900	3900	3900	3900
	机床外形尺寸(长x宽x高)	Dimension of machine (LxWxH)	mm	2340x1930x2080	2340x1930x2080	2340x1930x2080	2340x1930x2080

数控刀塔车床

Turret CNC Lathe

CK6560A

- 45°整体斜床身结构，具有高刚性及稳定性。
- 主轴轴承采用高精度进口轴承，具有高稳定性及长寿命，加工精度高。
- 进给轴采用大规格精密滚柱线轨，刚性强、阻尼低、精度高。
- 进给轴传动采用C3级精密滚珠丝杠，配合科学的预拉伸装配工艺，热变形小、传动精度高。
- 矩形尾座导轨，保证导向性及稳定性，尾座手动锁紧，方便可靠。
- 机床设置有侧、后两种排屑方式，便于用户合理选择排屑方式。
- 机床可选配气动防护门或气动天窗，实现自动化生产。

- 45°integrated base and slant bed structure ensures high rigidity and stability.
- The spindle bearing adopts high-precision imported bearing, which has high stability, long life and high precision.
- The feed shaft adopts large size and heavy duty precision guideway, which has strong rigidity, low damping and high precision.
- The feed shaft is driven by C3 precision ball screw, with scientific per-stretching assembly process, small thermal deformation and high transmission accuracy.
- Rectangular tailstock guideway ensures guidance and stability, manual locking, convenient and reliable.
- The machine is provided with two kinds of chip removal methods, side and back chip removal, which is convenient for users to choose.
- The machine could be equipped with pneumatic protective door or pneumatic roof-window to realize automatic production.

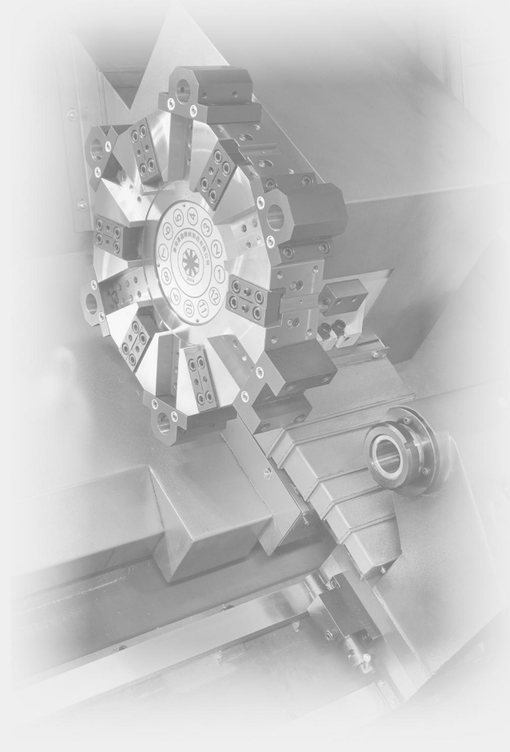



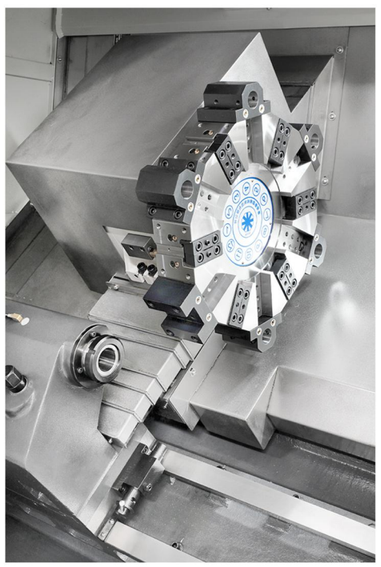

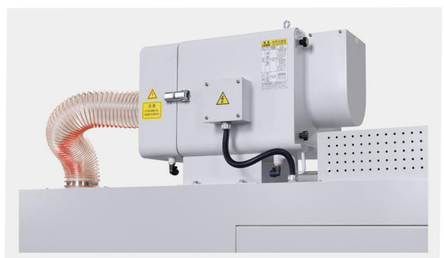





项目Item			单位Unit	CK6560A	CK6560A/750	CK6560B	CK6560B/750
加工范围 Capacity	床身上最大回转直径	Max.swing dia.over bed	mm	Φ600	Φ600	Φ600	Φ600
	滑板上最大回转直径	Max.swing dia.over slide	mm	Φ320	Φ320	Φ320	Φ320
	最大车削直径	Max.turning dia.	mm	Φ300	Φ300	Φ300	Φ300
	最大加工长度	Max.machining length	mm	550	750	520	750
	最大通过棒料直径	Max.bar dia.to be held	mm	Φ52	Φ52	Φ72	Φ72
主轴 Spindle	最高转速	Max.speed	rpm	3500	3500	3000	3000
	卡盘规格	Chuck specification	inch	8″中空 hollow	8″中空 hollow	10″中空 hollow	10″中空 hollow
	主轴头型式	Type of spindle head		A2-6	A2-6	A2-8	A2-8
	主轴内孔锥度	Taper of spindle bore		1:20/Φ68	1:20/Φ68	1:20/Φ96	1:20/Φ96
	主轴通孔直径	Spindle thru-hole	mm	Φ62	Φ62	Φ87	Φ87
	电机功率	Power motor	kW	15/18.5	15/18.5	15/18.5	15/18.5
进给 Feed	X/Z轴行程	Travel X/Z	mm	230/607	230/809	230/607	230/809
	X/Z轴快移速度	Rapid traverse X/Z	m/min	18/16	18/16	18/16	18/16
刀架 Turret	刀架型式	Type of turret		液压 hydraulic	液压 hydraulic	液压 hydraulic	液压 hydraulic
	刀位数量	Capacity of turret	pcs	12	12	12	12
	刀塔中心高	Center height of turret	mm	100	100	100	100
	刀杆尺寸(车削/镗削)	Tool rod dimension (turning/boring	mm	25x 25/Φ40	25x 25/Φ40	25x 25/Φ40	25x 25/Φ40
尾座 Tailstock	套筒直径/行程	Dia./travel of sleeve	mm	Φ90/140	Φ90/140	Φ90/140	Φ90/140
	顶尖锥度	Taper of center sleeve		MT No.5	MT No.5	MT No.5	MT No.5
	套筒驱动形式	Type of sleeve drive		液压 hydraulic	液压 hydraulic	液压 hydraulic	液压 hydraulic
	尾座体移动 形式	Type of moving tailstock		手动 manual	手动 manual	手动 manual	手动 manual
	尾座体锁紧形式	Type of locking tailstock		手动 manual	手动 manual	手动 manual	手动 manual
其它 Others	CNC控制系统	CNC controller		GSK 988TA	GSK 988TA	GSK 988TA	GSK 988TA
	电源容量	Power capacity	KVA	25	25	25	25
	床身倾斜角度	Slant degree of bed	deg	45°	45°	45°	45°
	冷却箱容积	Volume of coolant pump	L	80	80	80	80
	冷却电机功率	Motor power of coolant	W	370	370	370	370
	机床重量	Weight of machine	kg	3620	4020	3620	4020
	机床外形尺寸(长x宽x高)	Dimension of machine (LxWxH)	mm	2600x1770x1820	3215x1770x1820	2600x1770x1820	3215x1770x1820

数控刀塔车床

Turret CNC lathe

CK6536

- 45°整体斜床身结构，具有高刚性及稳定性。
- 主轴轴承采用高精度进口轴承，具有高稳定性及长寿命，加工精度高。
- 进给轴采用大规格精密滚柱线轨，刚性强、阻尼低、精度高。
- 进给轴传动采用C3级精密滚珠丝杠，配合科学的预拉伸装配工艺，热变形小、传动精度高。
- 矩形尾座导轨，保证导向性及稳定性，尾座手动锁紧，方便可靠。
- 机床设置有侧、后两种排屑方式，便于用户合理选择排屑方式。
- 机床可选配气动防护门或气动天窗，实现自动化生产。

- 45°integrated base and slant bed structure ensures high rigidity and stability.
- The spindle bearing adopts high-precision imported bearing, which has high stability, long life and high precision.
- The feed shaft adopts large size and heavy duty precision guideway, which has strong rigidity, low damping and high precision.
- The feed shaft is driven by C3 precision ball screw, with scientific per-stretching assembly process, small thermal deformation and high transmission accuracy.
- Rectangular tailstock guideway ensures guidance and stability, manual locking, convenient and reliable.
- The machine is provided with two kinds of chip removal methods, side and back chip removal, which is convenient for users to choose.
- The machine could be equipped with pneumatic protective door or pneumatic roof-window to realize automatic production.

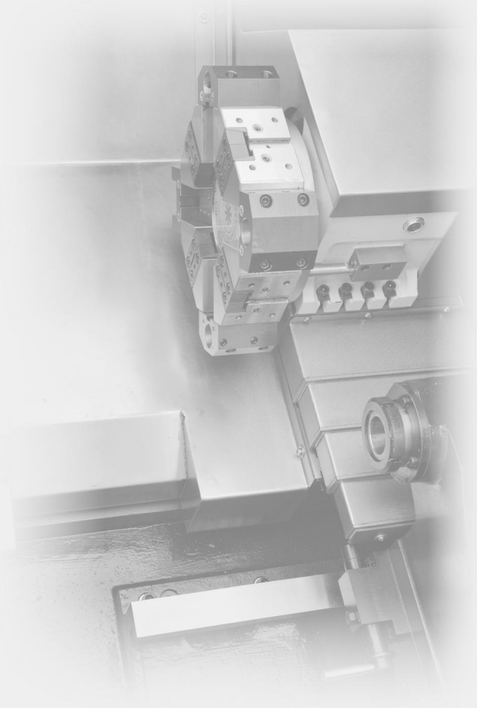









项目Item			单位Unit	CK6536	CK6536A	CK6545
加工范围 Capacity	床身上最大回转直径	Max.swing dia.over bed	mm	Φ400	Φ400	Φ400
	滑板上最大回转直径	Max.swing dia.over slide	mm	Φ200	Φ200	Φ200
	最大车削直径	Max.turning dia.	mm	Φ360	Φ360	Φ360
	最大加工长度	Max.machining length	mm	330	310	500
	最大通过棒料直径	Max.bar dia.to be held	mm	Φ45	Φ50	Φ50
主轴 Spindle	最高转速	Max.speed	rpm	4500	3500	3500
	卡盘规格	Chuck specification	inch	6″ 中空 hollow	8″ 中空 hollow	8″ 中空 hollow
	主轴头型式	Type of spindle head		A2-5	A2-6	A2-6
	主轴内孔锥度	Taper of spindle bore		MT No.6	1:20/Φ68	1:20/Φ68
	主轴通孔直径	Spindle thru-hole	mm	Φ57	Φ62	Φ62
	电机功率	Power motor	kW	7.5/11	11/15	11/15
进给 Feed	X/Z轴行程	Travel X/Z	mm	190/350	190/350	190/500
	X/Z轴快移速度	Rapid traverse X/Z	m/min	20/20	20/20	20/20
刀架 Turret	刀架型式	Type of turret		液压 hydraulic	液压 hydraulic	液压 hydraulic
	刀位数量	Capacity of turret	pcs	8	8	8
	刀塔中心高	Center height of turret	mm	80	80	80
	刀杆尺寸(车削/镗削)	Tool rod dimension (turning/boring	mm	25x 25/Φ32	25x 25/Φ32	25x 25/Φ32
尾座 Tailstock	套筒直径/行程	Dia./travel of sleeve	mm	Φ75/140	Φ75/140	Φ75/140
	顶尖锥度	Taper of center sleeve		MT No.5	MT No.5	MT No.5
	套筒驱动形式	Type of sleeve drive		液压 hydraulic	液压 hydraulic	液压 hydraulic
	尾座体移动 形式	Type of moving tailstock		手动 manual	手动 manual	手动 manual
	尾座体锁紧形式	Type of locking tailstock		手动 manual	手动 manual	手动 manual
其它 Others	CNC控制系统	CNC controller		GSK 988TA	GSK 988TA	GSK 988TA
	电源容量	Power capacity	KVA	18	20	20
	床身倾斜角度	Slant degree of bed	deg	45°	45°	45°
	冷却箱容积	Volume of coolant pump	L	70	70	70
	冷却电机功率	Motor power of coolant	W	370	370	370
	机床重量	Weight of machine	kg	2500	2500	2500
	机床外形尺寸(长x宽x高)	Dimension of machine (LxWxH)	mm	2477x1662x2055	2477x1662x2055	2477x1662x2055

数控刀塔车床

Turret CNC Lathe

CK50D

- 整体平床身底座，45°斜置式床鞍结构，具有高刚性及稳定性。
- 主轴轴承采用高精度进口圆柱轴承，具有高稳定性及长寿命，加工精度高。
- 进给轴采用大规格精密滚珠线轨，刚性强、阻尼低、精度高。
- 进给轴传动传动采用C3级精密滚珠丝杠，配合科学的预拉伸装配工艺，热变形小、传动精度高。
- 科学的油水分离结构，可独立回收润滑油，绿色环保。
- 镶钢式尾座导轨，保证导向性及稳定性，尾座体液压锁紧，方便可靠
- 机床设置有侧、后两种排屑方式， 便于用户合理选择排屑方式。
- 机床可选配气动防护门或气动天窗，实现自动化生产。

- Integrated base bed and 45° saddle structure has high rigidity and good stability.
- The spindle bearing adopts high-precision imported bearing, which has high stability, long life and high machining accuracy.
- The feed shaft adopts large size and heavy duty precision roller rail, which has strong rigidity, low damping and high precision.
- The feed shaft is driven by C3 precision ball screw, with scientific per-stretching assembly process, small thermal deformation and high transmission accuracy.
- Scientific oil-water separate structure and independent recovery of lubricating oil, green environmental protection.
- Insert steel tailstock guideway ensures the guide and stability, it is convenient and reliable for tailstock hydraulic locked.
- The machine is provided with two kinds of chip removal methods, side and back chip removal, which is convenient for users to choose.
- The machine could be equipped with pneumatic protective door or pneumatic roof-window to realize automatic production.

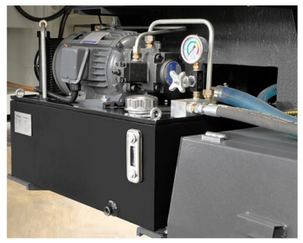

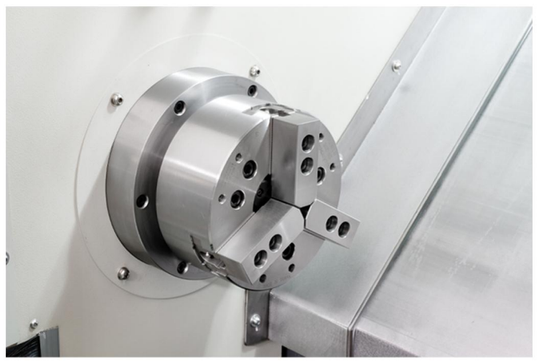

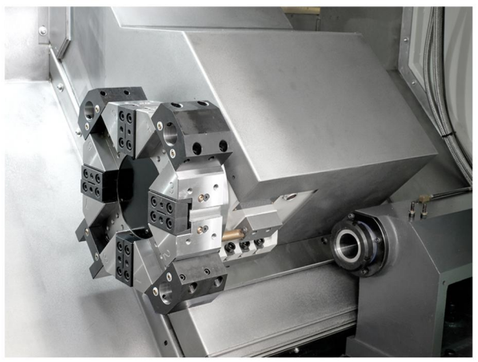

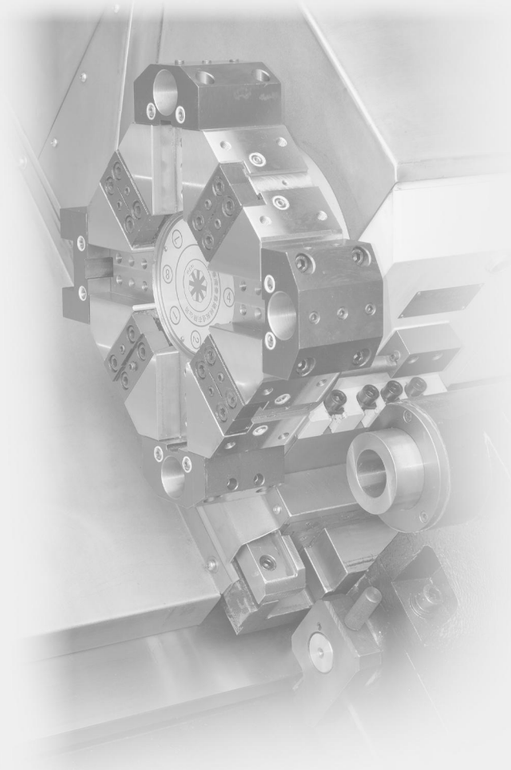

BOSHI 宝鸡机床



项目Item			单位Unit	CK50D	BT500
加工范围 Capacity	床身上最大回转直径	Max.swing dia.over bed	mm	Φ500	Φ400
	滑板上最大回转直径	Max.swing dia.over slide	mm	Φ260	Φ200
	最大车削直径	Max.turning dia.	mm	Φ360	Φ360
	最大加工长度	Max.machining length	mm	500 (D>50)	500
	最大通过棒料直径	Max.bar dia.to be held	mm	Φ50	Φ50
主轴 Spindle	最高转速	Max.speed	rpm	3000	3500
	卡盘规格	Chuck specification	inch	8″ 中空 hollow	8″中空 hollow
	主轴头型式	Type of spindle head		A2-6	A2-6
	主轴内孔锥度	Taper of spindle bore		1:20/Φ68	1:20/Φ68
	主轴通孔直径	Spindle thru-hole	mm	Φ62	Φ62
	电机功率	Power motor	kW	11/15	11/15
进给 Feed	X/Z轴行程	Travel X/Z	mm	190/520	190/500
	X/Z轴快移速度	Rapid traverse X/Z	m/min	15/15	20/20
刀架 Turret	刀架型式	Type of turret		液压 hydraulic	液压 hydraulic
	刀位数量	Capacity of turret	pcs	8	8
	刀塔中心高	Center height of turret	mm	80	80
	刀杆尺寸(车削/镗削)	Tool rod dimension (turning/boring	mm	25x 25/Φ32	25x 25/Φ32
尾座 Tailstock	套筒直径/行程	Dia./travel of sleeve	mm	Φ90/140	Φ75/140
	顶尖锥度	Taper of center sleeve		MT No.5	MT No.5
	套筒驱动形式	Type of sleeve drive		液压hydraulic	液压 hydraulic
	尾座体移动 形式	Type of moving tailstock		手动 manual	手动 manual
	尾座体锁紧形式	Type of locking tailstock		液压 hydraulic	手动 manual
其它 Others	CNC控制系统	CNC controller		GSK 988TA	GSK 988TA
	电源容量	Power capacity	KVA	20	20
	床鞍倾斜角度	Slant degree of saddle	deg	45°	45°
	冷却箱容积	Volume of coolant pump	L	82	70
	冷却电机功率	Motor power of coolant	W	370	370
	机床重量	Weight of machine	kg	3300	2500
	机床外形尺寸(长x宽x高)	Dimension of machine (LxWxH)	mm	2650x1710x1947	2660x1670x1630

数控自动化单元

Automatic CNC Unit

CT-50H

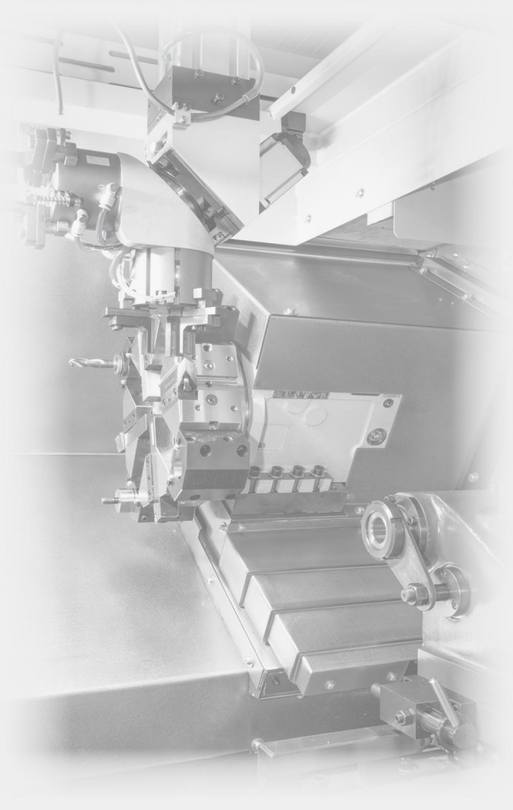



- 高刚性整体底座，结构紧凑，占地面积小。
- 45°斜置式床鞍，大跨距导轨结构，满足高刚性车削。
- 主轴轴承采用高精度进口轴承，具有高稳定性及长寿命，加工精度高。
- 进给轴采用大规格、重载精密线轨，刚性强、阻尼低、精度高。
- 进给轴传动采用C3级精密滚珠丝杠，配合科学的预拉伸装配工艺，热变形小、传动精度高。
- 科学的油水分离结构，可独立回收润滑油，绿色环保。
- 机床既可搭配桁架式机械手实现单机自动化，又可组线实现柔性加工单元。

- High rigidity integrated base and small footprint ensures the compact structure of machine.
- 45° inclined carriage bed with large span linear guide structure ensures high rigidity of machine.
- The spindle bearing adopts high-precision imported bearing, which has high stability, long life and high machining accuracy.
- The feed shaft adopts large size and heavy duty precision roller rail, which has strong rigidity, low damping and high precision.
- The feed shaft is driven by C3 precision ball screw, with scientific per-stretching assembly process,small thermal deformation and high transmission accuracy.
- Scientific oil-water separate structure and independent recovery of lubricating oil, green environmental protection.
- The machine is not only could equipped with the truss mainpulator to realize the single machine automatic, but also could assembled to realize the flexible machining unit.







项目Item			单位Unit	CT-30H	CT-40H	CT-50H
加工范围 Capacity	床身上最大回转直径	Max.swing dia.over bed	mm	Φ270	Φ450	Φ500
	滑板上最大回转直径	Max.swing dia.over slide	mm	Φ110	Φ260	Φ280
	最大车削直径	Max.turning dia.	mm	Φ110	Φ300	Φ360
	最大加工长度	Max.machining length	mm	200	300	330
	最大通过棒料直径	Max.bar dia.to be held	mm	Φ30	Φ45	Φ52
主轴 Spindle	最高转速	Max.speed	rpm	4500	6000	3500
	卡盘规格	Chuck specification	inch	30筒夹 collet	6″中空 hollow	8″中空 hollow
	主轴头型式	Type of spindle head		A2-4	A2-5	A2-6
	主轴内孔锥度	Taper of spindle bore		-	MT No.6	1:20/Φ68
	主轴通孔直径	Spindle thru-hole	mm	Φ36	Φ56	Φ62
	电机功率	Power motor	kW	3.7/5.5	10/23(电主轴 motorized spindle)	7.5/11
进给 Feed	X/Z轴行程	Travel X/Z	mm	300/300	160/300	215/335
	X/Z轴快移速度	Rapid traverse X/Z	m/min	20/20	20/20	20/20
刀架 Turret	刀架型式	Type of turret		排刀 comb type tool	液压 hydraulic	液压 hydraulic
	刀座数量(标配)	Capacity of turret(standard)	pcs	8	8	8
	刀塔中心高	Center height of turret	mm	55	80	80
	刀杆尺寸(车削/镗削)	Tool rod dimension (turning/boring)	mm	20x20/Φ25	25x25/Φ32	25x25/Φ32
尾座 Tailstock	套筒直径/行程	Dia./travel of sleeve	mm	-	Φ60/100	Φ75/140
	顶尖锥度	Taper of center sleeve		-	MT No.4	MT No.5
	套筒驱动形式	Type of sleeve drive		-	液压 hydraulic	液压 hydraulic
	尾座体移动形式	Type of moving tailstock		-	手动 manual	手动 manual
	尾座体锁紧形式	Type of locking tailstock		-	手动 manual	手动 manual
其它 Others	CNC控制系统	CNC controller		GSK 980TB3i	GSK 988TA	GSK 988TA
	电源容量	Power capacity	KVA	8	20	18
	床鞍倾斜角度	Slant degree of saddle	deg	0°	45°	45°
	冷却箱容积	Volume of coolant pump	L	48	71	81
	冷却电机功率	Motor power of coolant	W	150	370	370
	机床重量	Weight of machine	kg	1250	2100	2700
	机床外形尺寸(长x宽x高)	Dimension of machine (LxWxH)	mm	2090x1510x2520	1910x1580x1750	2100x1910x1820

注：机床外形尺寸不包括桁架式机械手及料仓。
Note: The overall dimensions of machine doesn't include the trussed manipulator and feed bin.

斜床身数控排刀车床

Slant Bed CNC Turret Lathe

CK46P

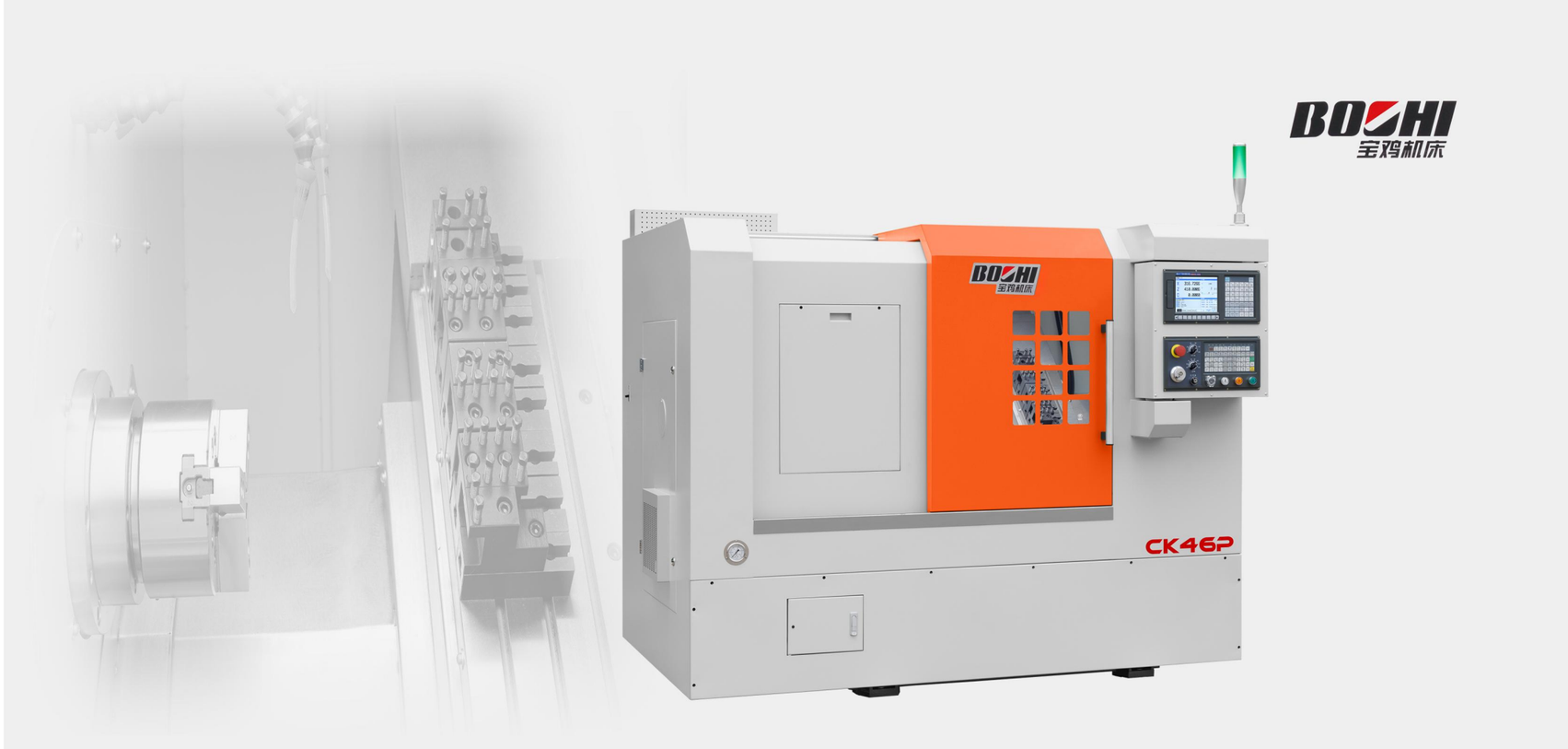

- 整体式斜床身底座结构，排屑流畅，具有高刚性及稳定性。
- 主轴轴承采用高精度进口轴承，具有高稳定性及长寿命，加工精度高。
- 进给轴采用大规格、重载精密滚珠线轨，刚性强、阻尼低、精度高。
- 进给轴传动采用C3级精密滚珠丝杠，配合科学的预拉伸装配工艺，热变形小、传动精度高。
- 加宽T型刀架板扩大了刀具安装范围，刀座调整方便，换刀高速准确。
- 机床设置有侧、后两种排屑方式，便于用户合理选择排屑方式。

- Integrated base and slant bed structure ensures flut chip disposal, which has high rigidity and stability.
- The spindle bearing adopts high-precision imported bearing, which has high stability, long life and high machining accuracy.
- The feed shaft adopts large size and heavy duty precision roller rail, which has strong rigidity, low damping and high precision.
- The feed shaft is driven by C3 precision ball screw, with scientific per-stretching assembly process, small thermal deformation and high transmission accuracy.
- The widening T-shaped turret plate expands the tool installation range, turret adjustment is convenient, and the tool change is fast.
- The machine is provided with two kinds of chip removal methods, side and back chip removal, which is convenient for users to choose.

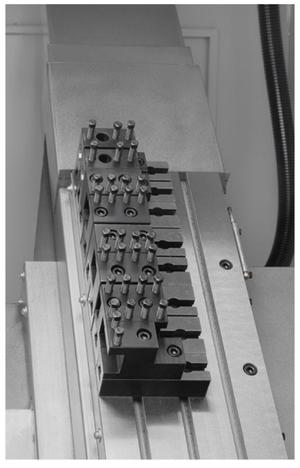



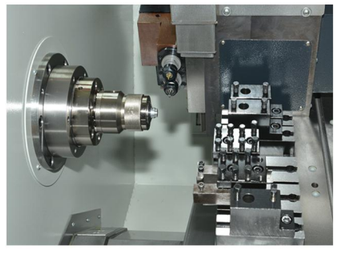

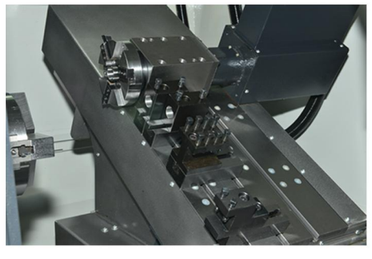

项目Item			单位Unit	CK52P	CK46P	CK42P
加工范围 Capacity	床身上最大回转直径	Max.swing dia.over bed	mm	Φ400	Φ400	Φ420
	滑板上最大回转直径	Max.swing dia.over slide	mm	Φ140	Φ140	Φ140
	最大车削直径	Max.turning dia.	mm	Φ360	Φ360	Φ280
	最大加工长度	Max.machining length	mm	270	270	200
	最大通过棒料直径	Max.bar dia.to be held	mm	Φ51	Φ45	Φ45
主轴 Spindle	最高转速	Max.speed	rpm	3500	4000	4000
	筒夹型式	Type of collet chuck	inch	52型 type	45型 type	42型 type
	主轴头型式	Type of spindle head		A2-6	A2-5	A2-5
	主轴内孔锥度	Taper of spindle bore		1:20/Φ68	MT No.6	MT No.6
	主轴通孔直径	Spindle thru-hole	mm	Φ62	Φ57	Φ57
	电机功率	Power motor	kW	7.5/11	5.5/7.5	5.5/7.5
进给 Feed	X/Z轴行程	Travel X/Z	mm	400/400	400/400	300/300
	X/Z轴快移速度	Rapid traverse X/Z	m/min	18/20	18/20	16/18
刀架 Turret	刀架型式	Type of turret		排刀 comb type tool	排刀 comb type tool	排刀 comb type tool
	刀座数量(标配)	Capacity of turret(standard)	pcs	8	8	5
	刀具中心高	Center height of turret	mm	72	72	70
	刀杆尺寸(车削/镗削)	Tool rod dimension (turning/boring)	mm	20x20/Φ25	20x20/Φ25	20x20/Φ25
其它 Others	CNC控制系统	CNC controller		GSK 988TA	GSK 988TA	GSK 988TA
	电源容量	Power capacity	KVA	15	12	12
	床身倾斜角度	Slant degree of bed	deg	45°	45°	30°
	冷却箱容积	Volume of coolant pump	L	72	72	69
	冷却电机功率	Motor power of coolant	W	370	370	150
	机床重量	Weight of machine	kg	2200	2200	2250
	机床外形尺寸(长x宽x高)	Dimension of machine (LxWxH)	mm	2150x1640x2025	2150x1640x2025	2242x1485x1915

高精密数控排刀车床

High Precision CNC Turret Lathe

CK30E

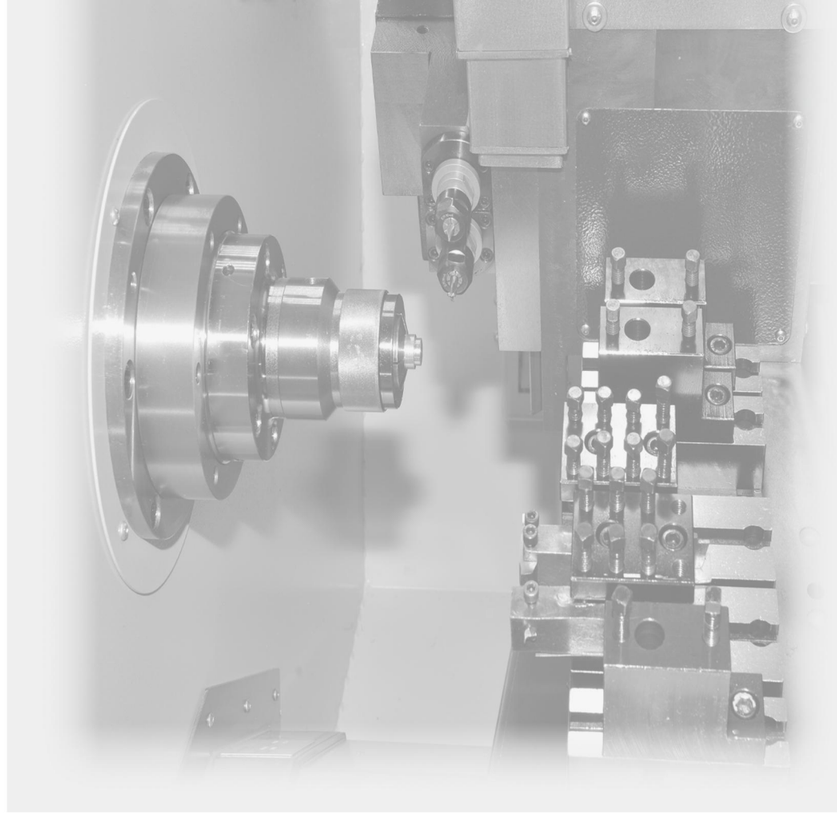



- 高刚性整体底座，结构紧凑，占地面积小。
- 高精度主轴，配以直线气缸及弹簧夹头，确保主轴高速平稳旋转。
- 主轴轴承采用高精度进口轴承，具有高稳定性及长寿命，加工精度高。
- 进给轴采用精密滚珠线轨，刚性强、阻尼低、精度高。
- 进给轴传动采用C3级精密滚珠丝杠，配合科学的预拉伸装配工艺，热变形小，传动精度高。
- 燕尾型排式刀架，刀座调整方便，换刀高速准确。
- 刀架板上装有自动拉料装置，通过数控系统控制，可方便实现自动化加工。
- 机床适用于仪器仪表、电子接插件及航天航空等小型零件的批量高效率精密加工。

- High rigidity integrated base and small footprint ensures the compact structure of machine
- The high-precision spindle equipped with a linear cylinder and spring collet, ensures smooth high-speed rotation of the spindle.
- The spindle bearing adopts high-precision imported bearing, which has high stability, long life and high machining accuracy.
- The feed shaft adopts precision ball screw, which has strong rigidity, low damping and high precision.
- The feed shaft is driven by C3 precision ball screw, with scientific per-stretching assembly process small thermal deformation and high transmission accuracy.
- Dovetail comb type tool block ensures easy setting, precision tool change and less repeatability.
- Turret board equipped with automatic feed machine, it's convenient to achieve the corporation automatic through CNC control system.
- The machine is suitable for efficient turning of large batch of small type workpiece in instrument, electronic connector and aerospace industries.



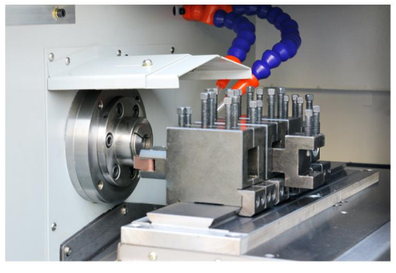

项目Item		单位 Unit	CK30L	CK30HL	CK30E	CK30	CK6730
加工范围 Capacity	床身上最大回转直径 Max.swing dia.over bed	mm	Φ270	Φ270	Φ240	Φ240	Φ300
	滑板上最大回转直径 Max.swing dia.over slide	mm	Φ110	Φ110	Φ120	Φ120	Φ130
	最大车削直径 Max.turning dia.	mm	Φ110	Φ110	Φ70	Φ70	Φ69
	最大加工长度 Max.machining length	mm	200	200	150	150	200
	最大通过棒料直径 Max.bar dia.to be held	mm	Φ30	Φ30	Φ30	Φ30	Φ30
主轴 Spindle	主轴最高转速 Max.speed of spindle	rpm	4500	4500	6000	6000	5000
	筒夹规格 Collet specification		30型 type	30型 type	30型 type	30型 type	30型 type
	主轴头型式 Type of spindle head		A2-4	A2-4	A2-4	A2-4	A2-4
	工件夹紧方式 Work chucking mode		气动 pneumatic		气动 pneumatic		液压 hydraulic
	主轴通孔直径 Spindle thru-hole	mm	Φ36	Φ36	Φ36	Φ36	Φ41
	电机功率 Power motor	kW	3.7	3.7	3.7	3.7	3.7
进给 Feed	X/Z轴行程 Travel X/Z	mm	300/300	350/400	250/180	250/180	350/250
	X/Z轴快移速度 Rapid traverse X/Z	m/min	20/20	20/20	20/20	15/15	15/15
刀架 Turret	刀架型式 Type of turret		排刀 comb type tool		排刀 comb type tool		
	刀具中心高 Center height of tool	mm	55	55	35	35	34.5
	刀杆尺寸(车削/镗削) Tool rod dimension (turning/boring)	mm	20x 20/Φ25	20x 20/Φ25	12x12/Φ25	12x12/Φ25	16x16/Φ25
其它 Others	CNC控制系统 CNC controller		GSK 980 TB3i	GSK 980 TB3i	FANUC 0I-TF	FANUC 0I-TF	FANUC 0I-TF
	电源容量 Power capacity	KVA	8	8	8	8	12
	导轨形式 Type of quideway		滚珠线轨 Ball bearing guideway			硬轨 hard guideway	
	冷却箱容积 Volume of coolant pump	L	48	48	48	48	44
	冷却电机功率 Motor power of coolant	W	150	150	150	150	150
	机床重量 Weight of machine	kg	1175	1330	1020	1020	2000
	机床外形尺寸(长x宽x高) Dimension of machine (LxWxH)	mm	1510x1410x1760	1640x1475x1760	1319x1495x1805	1319x1495x1805	1766x1668x2015

注：

1. 以上各机型均可选配永磁同步电主轴(4.75/11kW)。
2. CK30L/CK30HL/CK30E/CK30机床均可选配Y轴侧铣伺服动力头+排刀。
3. CK6730机床可选配Y轴侧铣伺服动力头+排刀或Y轴侧铣伺服动力头+8工位液压刀塔。

Notes:

1. All the above models can be optionally equipped with permanent magnet synchronous motorized spindles (4.75/11kW).
2. CK30L/CK30HL/CK30E/CK30 CNC lathe are available with Y-axis side milling servo power head and comb type turret.
3. CK6730 lathe is available with Y- axis side milling servo power head, comb type turret or Y-axis side milling servo power head and 8-station hydraulic turret.