宝鸡机床集团有限公司
BAOJI MACHINE TOOL GROUP CO.,LTD
宝鸡忠诚机床股份有限公司
BAOJI ZHONGCHENG MACHINE TOOL CO.,LTD

BOJHI 宝鸡机床

HMC系列

卧式加工中心

Machining Center

匠 心 智 造 中 国 好 机 床



地址:中国陕西省宝鸡市高新十四路
Add: Gaoxin 14 Road,Baoji,Shaaxi,China
邮编Postcode:721013
企业邮箱Email:gsbgs@bjmtw.com
官方网址Http://www.bjmtw.com

国内贸易Domestic Trade
电话Tel:0917-3566908 3566909
传真Fax:0917-3566966
邮箱Email:xsgs@bjmtw.com

国际贸易International Trade
电话Tel:+86-917-3566893 3566897
传真Fax:0917-3566900
邮箱Email:sales@bjmtw.com

全国客户服务热线Hot Line:400-119-9196

本样册内所印各种说明及图片如有变动，恕不另行通知（202503版）
Design and specifications given herein are subject to change without prior（Version 202503）

www.bjmtw.com

HMC系列

HMC Series Machine Tool



01 产品概况 Product Overview

HMC系列卧式加工中心包括HMC500、HMC630、HMC630G、HMC800、HMC800G五款产品，均采用正T型结构，整体式底座，整机结构刚性高。采用高档数控系统，高速配置，控制精度高，能满足各行业需求。执行精密加工中心精度标准，机床配双托盘自动工件交换系统(HMC630G、HMC800G单工作台)，适用于各种模具的高效，高精加工。

HMC series horizontal machining center include five models, HMC500, HMC630, HMC630G, HMC800 and HMC800G, all of which adopt T-type structure, integral base and high rigidity of the whole machine structure. Adopting high level CNC system, high speed configuration, high control accuracy, can meet the needs of various industries. Implementing precision machining center accuracy standards, the machine is equipped with a double pallet automatic workpiece exchange system (HMC630G、HMC800G single worktable), which is suitable for high efficiency, high precision machining of various moulds.

适用行业：广泛应用于箱体、盘类、板壳、机座等零件的批量多面机械加工，特别适合用于各种模具、有色金属等零件的高精高速加工。

Applicable industries: It is widely used in batch multi-faceted mechanical processing of boxes, discs, plate shells, bases and other parts, especially suitable for high-precision and high-speed processing of various molds, non-ferrous metals and other parts.

02 性能优势 Performance advantages

●机床执行GB/T20957精密加工中心检验标准，主要精度在国家标准基础上压缩25%-35%，HMC500、HMC630及HMC630G三轴定位精度可达到0.010(选配光栅0.008)mm，重复定位精度可达到0.008(选配光栅0.005)mm；HMC800及HMC800G三轴定位精度可达到0.012mm(选配光栅0.010)，重复定位精度可达到0.009 mm(选配光栅0.006)；

●高精度、高刚性、重负荷T型整体式底座设计，立柱、底座等采用有限元进行受力、热变形优化设计，布筋合理，热变形均匀，保证全行程刚性和加工精度稳定性；

●HMC500机床主轴为直联式，HMC630、HMC630G、HMC800、HMC800G机床主轴为皮带主轴配减速器，主轴采用长效脂润滑；配强制冷却，全闭环冷却系统，机床热稳定好，保持恒定高精度；

●三轴全部采用大规格重型滚柱线性导轨，机床刚性高，运行速度快，精度持久；

●双螺旋排屑器+链式排屑器，排屑流畅；Y轴双气缸自重平衡系统运行平稳，精度高。

● The machine tool implements GB/T20957 precision machining center inspection standard, and the main accuracy is improved by 25%-35% based on the national standard. HMC500、 HMC630 and HMC630G three-axis positioning accuracy can reach 0.010(grating scale can reach 0.008 with optional configuration), and repeat positioning accuracy can reach 0.008(grating scale can reach 0.005 with optional configuration)mm; HMC800 and HMC800G three-axis positioning accuracy can reach 0.012 mm(grating scale can reach 0.010 with optional configuration), repeat positioning accuracy can reach 0.009 mm(grating scale can reach 0.006 with optional configuration);

● High precision, high rigidity, heavy load T-type integral base design, column, base, etc. using finite element for force, thermal deformation optimisation design, reasonable reinforcement, thermal deformation uniformity, to ensure that the full travel rigidity and machining accuracy stability;

● HMC500 machine spindle is direct-connected, HMC630, HMC630G, HMC800, HMC800G machine spindle is belt spindle with reducer, spindle adopts long-term grease lubrication; it is equipped with forced cooling and full closed-loop cooling system, which ensures good thermal stability of the machine tool and maintains constant high precision;

● All three axes adopt large size heavy roller linear guideway, the machine has high rigidity, fast running speed and long term precision;

● Double spiral chip conveyor + chain chip conveyor, smooth chip removal; Y-axis double cylinder self-weight balancing system runs smoothly, high precision.

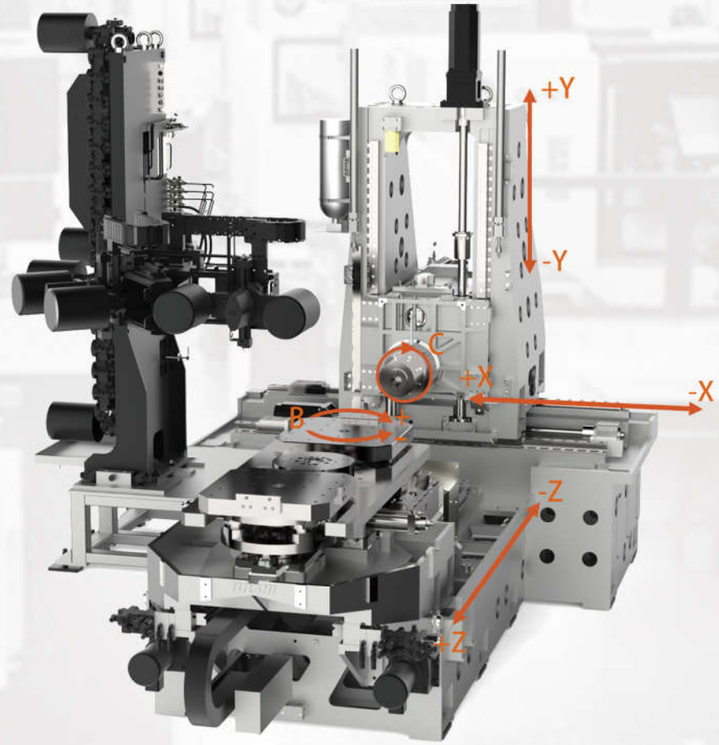

HMC630光机图示

03 机床数据 Machine data

项目 Item		单位 Unit	HMC500	HMC630	HMC630G	HMC800	HMC800G
移动 Travel	X轴 X axis	mm	850	1000	1000	1350	1350
	Y轴 Y axis	mm	700	850	850	1100	1080
	Z轴 Z axis	mm	800	850	850	1120	1100
	主轴端到工作台中心的距离 Distance from spindle nose to worktable center	mm	70-870	200-1050	200-1050	200-1320	150-1250
	主轴中心到托盘顶部的距离 Distance from spindle center to top of pallet	mm	75-775	75-925	75-925	75-1175	95-1175
工作台及托盘 Worktable and pallets	工作台尺寸 Worktable size	mm	500×500	630×630	630×630	800×800	800×800
	工作台分度 Worktable indexing	Deg	360×1°（0.001°）	360×1°（0.001°）	360×1°（0.001°）	360×1°（0.001°）	360×1°（0.001°）
	工作台类型 Worktable type		螺纹孔型24-M16 Tthreaded hole type 24-M16				/
	工作台承载能力 Worktable loading capacity	kg	500	1200	1200	2000	2000
	最大工件尺寸、回转直径 Max. workpiece size, rotary diameter	mm	Φ750，H850	Φ1000，H1000	Φ1000，H1000	Φ1200，H1300	Φ1300，H1300
	托盘交换型式 Pallet exchange type		旋转式 Rotating		/	旋转式 Rotating	/
	托盘个数 Pallet number		2	2	1	2	1
主轴 Spindle	主轴最高转速 Max. speed of spindle	r/min	10000	6000	6000	6000	6000
	主轴功率 Spindle power	kW	11/15(FANUC)	18.5/22(FANUC)	18.5/22(FANUC)	22/26(FANUC)	22/26(FANUC)
	主轴锥孔规格 Spindle bore		BT40	BT50	BT50	BT50	BT50
进给 Feed	快速进给速度X/Y/Z Rapid feed speed X/Y/Z	m/min	32/32/32	36/36/36	36/36/36	32/32/32	32/32/32
	切削进给速度X/Y/Z Rapid feed speed X/Y/Z	m/min	12	12	12	12	12
刀具装置 Tool device	刀具容纳数 Tool capacity	个	32	40	40	60	40
	刀具交换方式 Tool exchange type		机械手 Manipulator				
	刀具选择方式 Tool selection method		双向 Two-way				
	刀具最大重量 Max. tool weight	kg	8	25	25	25	25
	最大刀具直径 Max. tool diameter	mm	80/150	120/240	120/240	120/240	120/240
	最大刀具长度 Max. tool length	mm	300	400	400	400	400
精度 Accuracy	定位精度 Position accuracy	mm	0.010	0.010	0.010	0.012	0.012
	配光栅尺定位精度 Positioning accuracy of Grating scale	mm	0.008	0.008	0.008	0.01	0.01
	重复定位精度 Repeat position accuracy	mm	0.008	0.008	0.008	0.009	0.009
	配光栅尺重复定位精度 Repeat positioning accuracy of grating scale	mm	0.005	0.005	0.005	0.006	0.006
	工作台分度定位精度 Positioning accuracy of worktable indexing	″	14	14	14	14	14
	工作台重复分度定位精度 Repeat positioning accuracy of worktable indexing	″	8	8	8	8	8

项目 Item		单位 Unit	HMC500	HMC630	HMC630G	HMC800	HMC800G
其它 Other	数控系统 CNC controller		FANUC 0i-MF	FANUC 0i-MF	FANUC 0i-MF	FANUC 0i-MF	FANUC 0i-MF
	气压 Air pressure	MPa	≥0.6	≥0.6	≥0.6	≥0.6	≥0.6
	电源 Power	kW	50	60	60	80	70
	机床外形尺寸 Machine size	mm	5300×3900×3100	5800×4700×3500	5600×3800×3500	6700×4800×3900	5400×5200×3900
			（不含脚踏板、排屑器、接屑车、液压站等） （ without foot pedal, chip conveyor, cart, hydraulic station, etc. ）				
	机床重量 Gross weight	kg	20000	25000	21000	25000	23000

机床配置表 ●标配 ○选配 -没有

项目 Item	品牌厂家 Brand manufacturers	HMC500	HMC630	HMC630G	HMC800	HMC800G
移动 Travel	FANUC 0i-MF(3)	○	●	●	●	●
	FANUC 0i-MF(5)	●	-	-	-	-
	西门子 SIEMENS	○	○	○	○	○
工作台 Workpiece	双工作台360×0.001° Double worktable	○	○	-	○	-
	双工作台360×1° Double worktable	●	●	-	●	-
	单工作台360×0.001° Single worktable	-	-	○	-	○
	单工作台360×1° Single worktable	-	-	●	-	●
	托盘夹具接口：4个 Tray fixture interface: 4	○	○	○	○	○
主轴锥孔 Spindle taper	BT40	●	○	○	○	○
	BT50	○	●	●	●	●
	HSK A63	○	○	○	○	○
	HSK A100	○	○	○	○	○
刀位数 Tool position	32	●	○	○	○	○
	40	○	●	●	○	●
	60	○	○	○	●	○
	90	○	○	○	○	○
液压单元 Hydraulic unit		●	●	●	●	●
光栅尺 Grating scale		○	○	○	○	○
润滑单元 Lubrication unit		●	●	●	●	●
中心出水 Central effluent		○	○	○	○	○
强制冷却 Forced cooling		●	●	●	●	●
配自动线 Assembly automation line		○	○	○	○	○

05 机床图释 Machine tool illustration

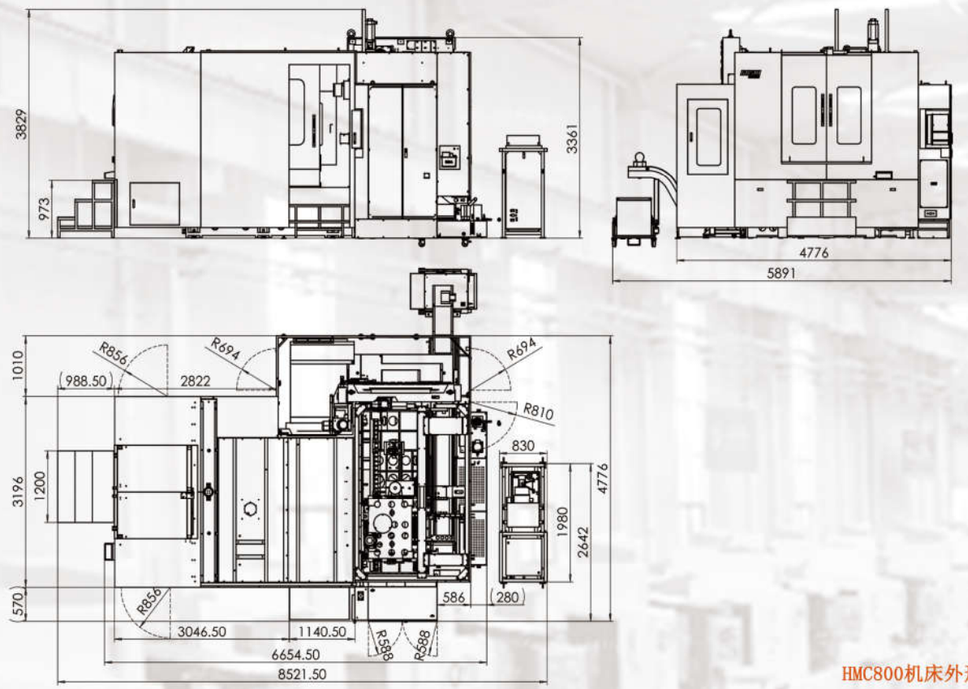

HMC800机床外形尺寸

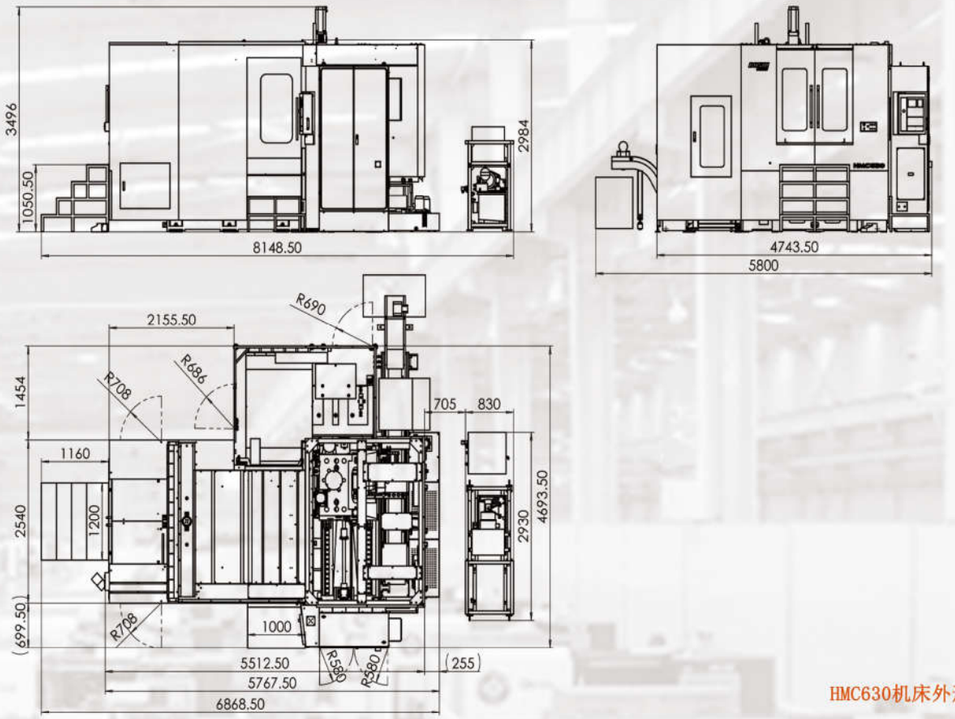

HMC630机床外形尺寸

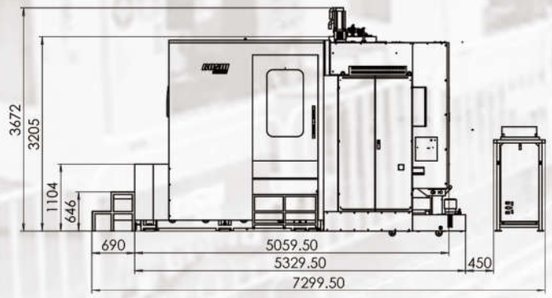

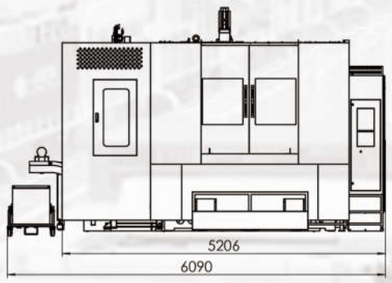

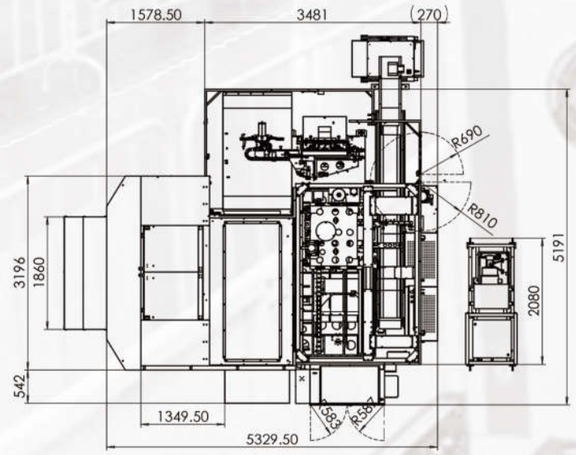

HMC800G机床外形尺寸

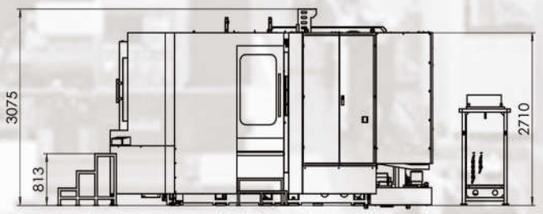

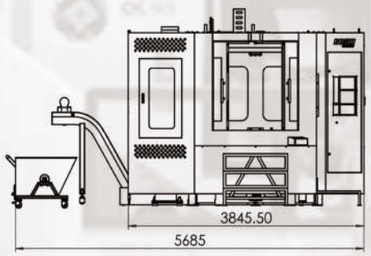

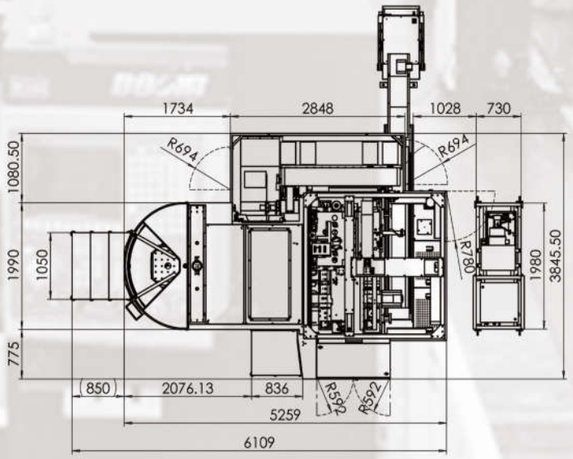

HMC500机床外形尺寸